Other 3.2

REV	ECN	DESCRIPTION	DESIGN	DATE
001	/	ADD	/	2020-11-09

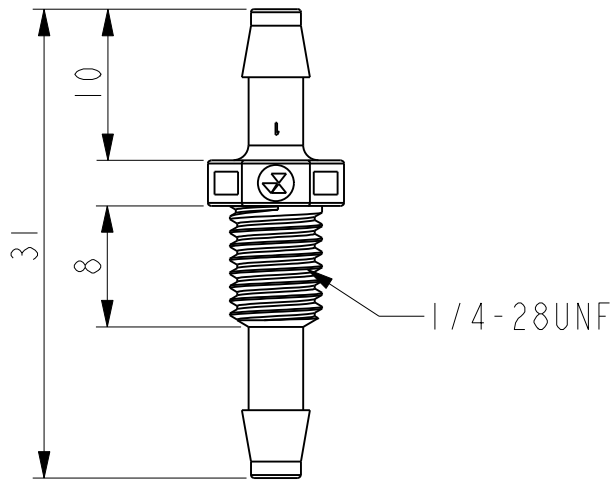

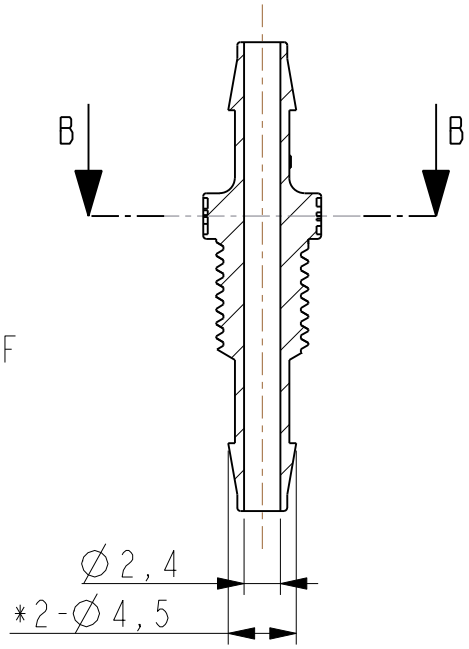

截面 A-A
比例 2.000

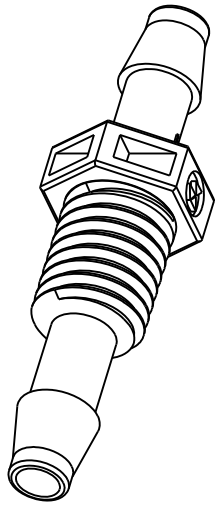

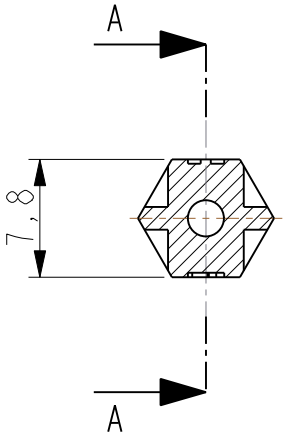

截面 B-B

技术要求：
1. 未注尺寸按3D
2. 未注线性及角度公差按ISO 2768-1-1989-c
   未注形状和位置公差按ISO 2768-2-1989-L
3. 所用材料符合RoHS 2.0要求
4. *要素为关键要素；

FOREACH			NAME	穿板倒刺接头 PMB-U28-32D-PP-N 809463		
DESIGN	/	2020/11/09	DWG No.	C-443-02-00040	REV	001
CHECK			MAT	PP	COLOR	本色
CHECK			MODEL		PN	
APPR.			SF02	IP / 0.347	2.000	A4

THIS DRAWING AND THE INFORMATION CONTAINED HEREIN IS THE PROPERTY OF FOREACH TECH Co., LTD, AND SHALL NOT BE USED, REPRODUCED, PUBLISHED OR DISCLOSED TO OTHERS WITHOUT THE EXPRESS WRITTEN CONSENT OF FOREACH TECH Co., LTD.