Other 3.2

| REV | ECN | DESCRIPTION | DESIGN | DATE |
|---|---|---|---|---|
| | | | | |
| | | | | |

接管外径：1.6~2.0mm

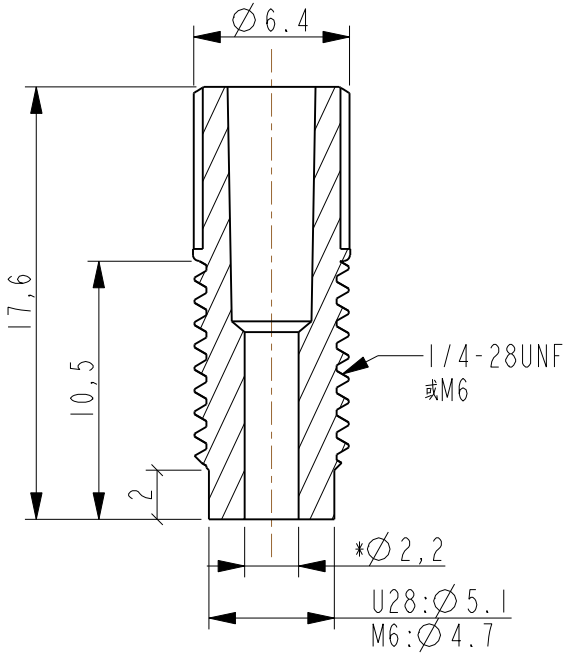


接管外径：2.5mm

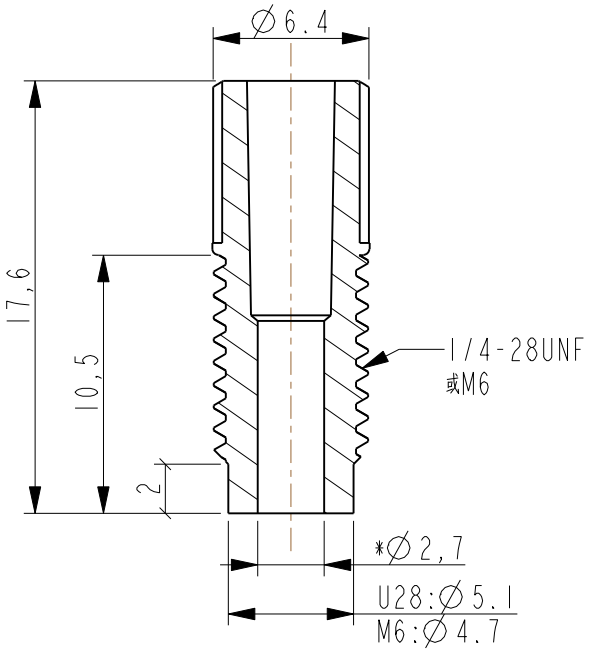


接管外径：3.0~3.2mm

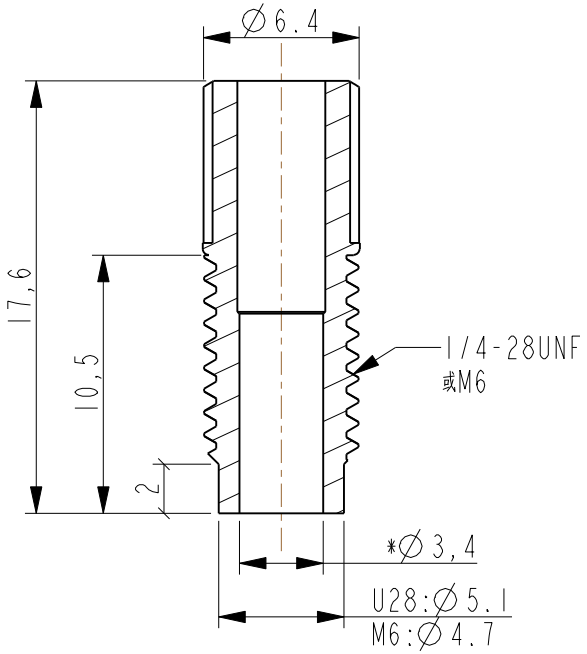


| 接管外径 | 1.6~2.0 | | 2.5 | | 3.0~3.2 | |
|---|---|---|---|---|---|---|
| 螺纹 | U28 | M6 | U28 | M6 | U28 | M6 |
| PEEK本色 | 443-02-00362 | 443-02-00365 | 443-02-00363 | 443-02-00366 | 443-02-00364 | 443-02-00367 |
| PVDF本色 | 443-02-00418 | 443-02-00424 | 443-02-00420 | 443-02-00426 | 443-02-00422 | 443-02-00428 |
| PPS黑色 | 443-02-00419 | 443-02-00425 | 443-02-00421 | 443-02-00427 | 443-02-00423 | 443-02-00429 |

技术要求：

1. 未注尺寸按3D
2. 未注线性及角度公差按ISO 2768-1-1989-C
   未注形状和位置公差按ISO 2768-2-1989-L
3. 所用材料符合RoHS要求
4. 带"*"为关键要素；

| FOREACH | | | NAME | HF6系列紧凑平底接头 | | |
|---|---|---|---|---|---|---|
| DESIGN | | | DWG No. | / | REV | / |
| CHECK | | | MAT | / | COLOR | / |
| CHECK | | | MODEL | | PN | |
| APPR. | | | 140D | ASM / 0,000 | 1,000 | A4 |

THIS DRAWING AND THE INFORMATION CONTAINED HEREIN IS THE PROPERTY OF FOREACH TECH Co., LTD, AND SHALL NOT BE USED, REPRODUCED, PUBLISHED OR DISCLOSED TO OTHERS WITHOUT THE EXPRESS WRITTEN CONSENT OF FOREACH TECH Co., LTD.