REV	ECN	DESCRIPTION	DESIGN	DATE

Other

3.2

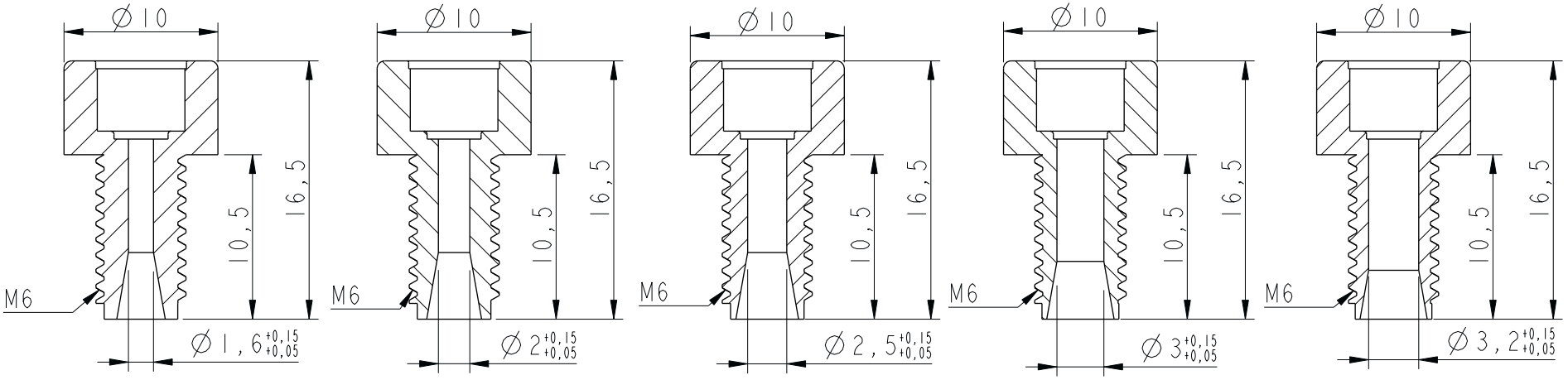

1.6mm　2.0mm　2.5mm　3.0mm　3.2mm

接管尺寸	型号	材料	本色(N)	黑色(B)
1.6mm	HNF-M6-16-PV-N/B	PVDF (PV)	443-00-00205	443-00-00478
2.0mm	HNF-M6-20-PV-N/B		443-00-00208	443-01-00154
2.5mm	HNF-M6-25-PV-N/B		443-00-00206	443-01-00152
3.0mm	HNF-M6-30-PV-N/B		443-00-00228	443-01-00155
3.2mm	HNF-M6-32-PV-N/B		443-00-00207	443-01-00153

技术要求:

1. 未注尺寸按3D
2. 未注线性及角度公差按ISO 2768-1-1989-c
   未注形状和位置公差按ISO 2768-2-1989-L
3. 所用材料符合RoHS 2.0要求
4. *要素为关键要素;

FOREACH			NAME	表滚卡箍接头 HNF-M6		
DESIGN			DWG No.		REV	001
CHECK			MAT	/	COLOR	/
CHECK			MODEL	/	PN	/
APPR.			SF02	ASM /	1,000	A4

THIS DRAWING AND THE INFORMATION CONTAINED HEREIN IS THE PROPERTY OF FOREACH TECH Co., LTD, AND SHALL NOT BE USED, REPRODUCED, PUBLISHED OR DISCLOSED TO OTHERS WITHOUT THE EXPRESS WRITTEN CONSENT OF FOREACH TECH Co., LTD.