REV	ECN	DESCRIPTION	DESIGN	DATE
001	/	NEW	/	2022-6-23

Other 3.2

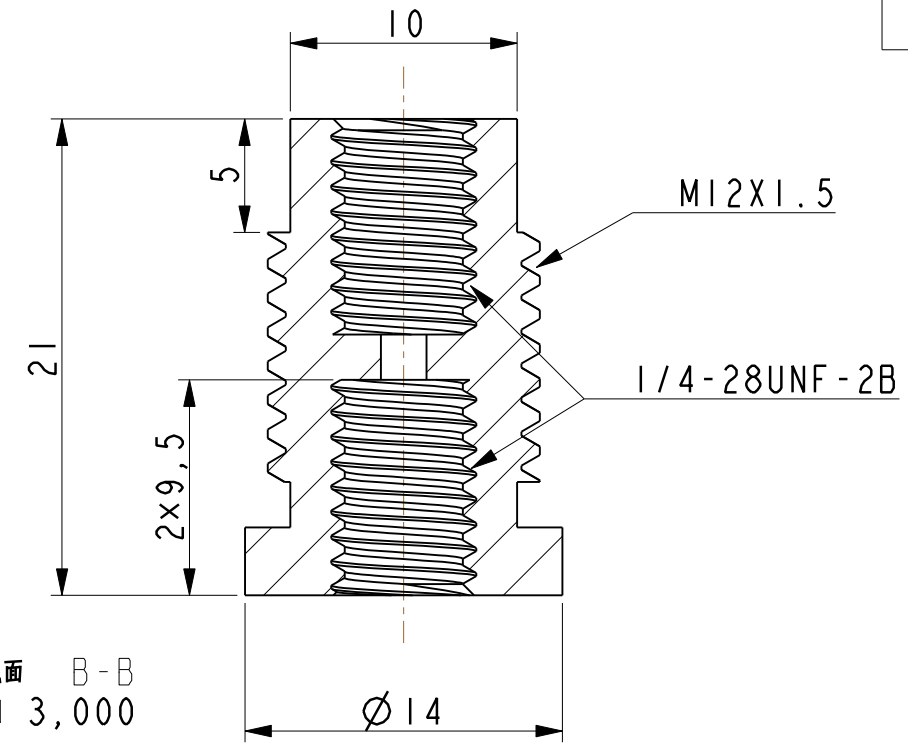

截面 B-B
比例 3.000

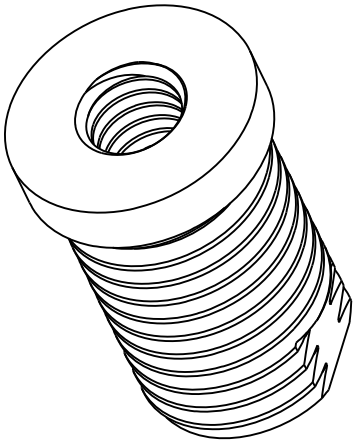

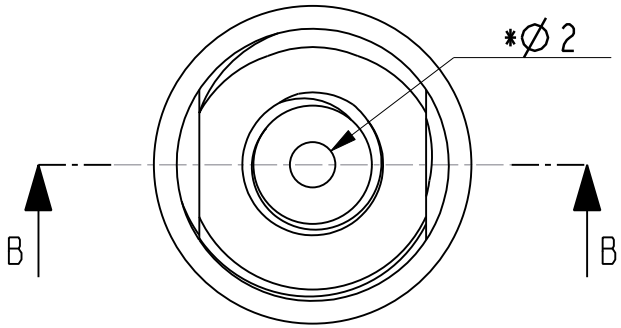

技术要求：
1. 未注尺寸按3D
2. 未注线性及角度公差按ISO 2768-1-1989-c
   未注形状和位置公差按ISO 2768-2-1989-L
3. 所用材料符合RoHS 2.0要求
4. 带"*"为关键要素；

FOREACH			NAME	穿板二通内螺纹接头 PMU-M12-U28-20-PP-N 809525		
DESIGN	/	2022-6-23	DWG No.	443-02-00104	REV	001
CHECK			MAT	PP	COLOR	本色
CHECK			MODEL	PMU-M12-U28-20-PP-N	PN	809525
APPR.					2,000	

THIS DRAWING AND THE INFORMATION CONTAINED HEREIN IS THE PROPERTY OF FOREACH TECH Co., LTD, AND SHALL NOT BE USED, REPRODUCED, PUBLISHED OR DISCLOSED TO OTHERS WITHOUT THE EXPRESS WRITTEN CONSENT OF FOREACH TECH Co., LTD.