# SMTP Pipetting Pump
## Specification Sheet



# Table Of Contents

1 Introduction ..... 4
1.1 SMTP0 ..... 4
1.1.1 Overview ..... 4
1.1.2 Features ..... 4
1.2 SMTP1 ..... 4
1.2.1 Overview ..... 4
1.2.2 Features ..... 4
1.3 SMTP2 ..... 4
1.3.1 Overview ..... 4
1.3.2 Features ..... 4
1.4 SMTP4 ..... 5
1.4.1 Overview ..... 5
1.4.2 Features ..... 5
1.5 SMTP Series Comparison ..... 5
2 Appearance and Dimensions ..... 6
2.1 SMTP0 ..... 6
2.2 SMTP1 ..... 6
2.3 SMTP2 ..... 7
2.4 SMTP4 ..... 7
3 Motor Information ..... 8
4 Sensor Information ..... 9
4.1 SMTP0/SMTP1 ..... 9
4.2 SMTP4 ..... 10
5 Optocoupler Information ..... 11
6 Specification ..... 12
6.1 SMTP0 ..... 12
6.1.1 SMTP0 Specifications ..... 12
6.1.2 Pipetting Performance ..... 12

**6.2** SMTP1 ..... 13

6.2.1 SMTP1 Specifications ..... 13

6.2.2 Pipetting Performance ..... 13

**6.3** SMTP2 ..... 14

6.3.1 SMTP2 Specifications ..... 14

6.3.2 Pipetting Performance ..... 14

**6.4** SMTP4 ..... 15

6.4.1 SMTP4 Specifications ..... 15

6.4.2 Pipetting Performance ..... 15

7 **Selection Guide** ..... 16

8 **Ordering Information** ..... 17

9 **Appendices** ..... 19

**9.1** Appendix : Tables and Figures ..... 19

# 1 Introduction

## 1.1 SMTP0

### 1.1.1 Overview

SMTP0 air displacement pipetting pump.

Prevents cross-contamination during sample transfer and reagent dispensing.

### 1.1.2 Features

Tubeless, no priming required.

High precision, stable operation.

Lightweight, compact, maintenance-free.

## 1.2 SMTP1

### 1.2.1 Overview

SMTP1 automatic tip ejection air displacement pipetting pump (ADP).

Prevents cross-contamination during sample transfer and reagent dispensing.

Integrated tip presence detection (TPON/OFF) and tip ejection (ADTP).

### 1.2.2 Features

Tubeless, no priming required.

High precision, stable operation.

Lightweight, compact, maintenance-free.

## 1.3 SMTP2

### 1.3.1 Overview

Programmable automatic air displacement pipetting pump (ADTP).

Prevents cross-contamination during sample transfer and reagent dispensing.

Integrated tip presence detection (TPON/OFF), tip ejection (ADTP).

Integrated automatic liquid level detection (LLD) and tip blockage detection (TPBD).

### 1.3.2 Features

Tubeless, no priming required.

High precision, stable operation.

Lightweight, compact, maintenance-free.

Multiple liquid detection methods: pressure, capacitance, hybrid.

Real-time aspiration/dispensing pressure and tip blockage monitoring (TPBD).

Operate standalone or cascade up to 16 pumps.

LED indicator for status feedback.

Optional protective cover and disposable tips.

## 1.4 SMTP4

### 1.4.1 Overview

SMTP4 air-displacement pipetting pump.

Prevents cross-contamination during sample transfer and reagent dispensing.

Integrated automatic tip ejection function.

### 1.4.2 Features

Tubeless, priming-free.

High precision, stable operation.

Lightweight, compact, maintenance-free.

## 1.5 SMTP Series Comparison

Table 1 SMTP Series Comparison

| SMTP Series Comparison | | | | |
|---|---|---|---|---|
| Series | SMTP0 | SMTP1 | SMTP2 | SMTP4 |
| Cost | Low | Medium | High | Medium |
| Communication Mode | None | None | RS232/RS485/CAN | None |
| Tip Adapter | Optional | Standard | Standard | Standard |
| ADTP (Auto Tip Ejection) | Not Applicable | Standard | Standard | Standard |
| PLLD (Pressure Liquid Level Detection) | Not Applicable | Not Applicable | Standard | Not Applicable |
| CLLD (Capacitive Liquid Level Detection) | Not Applicable | Not Applicable | Standard | Not Applicable |
| Pressure LLD Interface | Standard | Standard | Not Applicable | Not Applicable |
| MMP (Motor Drive) | Not Applicable | Not Applicable | Standard | Not Applicable |
| Capacity 50μL | Optional | Optional | Not Applicable | Standard |
| Capacity 100μL | Optional | Optional | Not Applicable | Standard |
| Capacity 250μL | Optional | Optional | Not Applicable | Standard |
| Capacity 500μL | Optional | Optional | Not Applicable | Standard |
| Capacity 1000μL | Optional | Optional | Standard | Standard |

Foreach Warranty
Please refer to our General Terms of Sale (GTS)

# 2 Appearance and Dimensions

Unit:mm

## 2.1 SMTP0

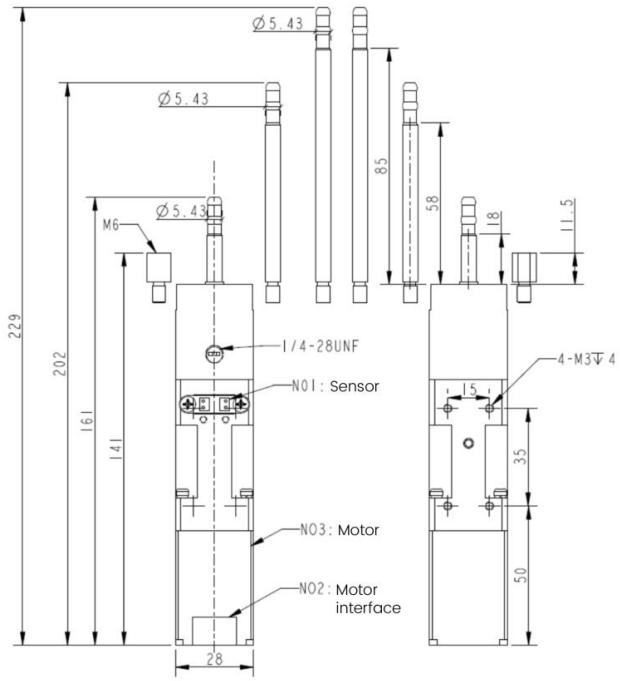


Figure 1 SMTP0 Outline Dimensions

## 2.2 SMTP1

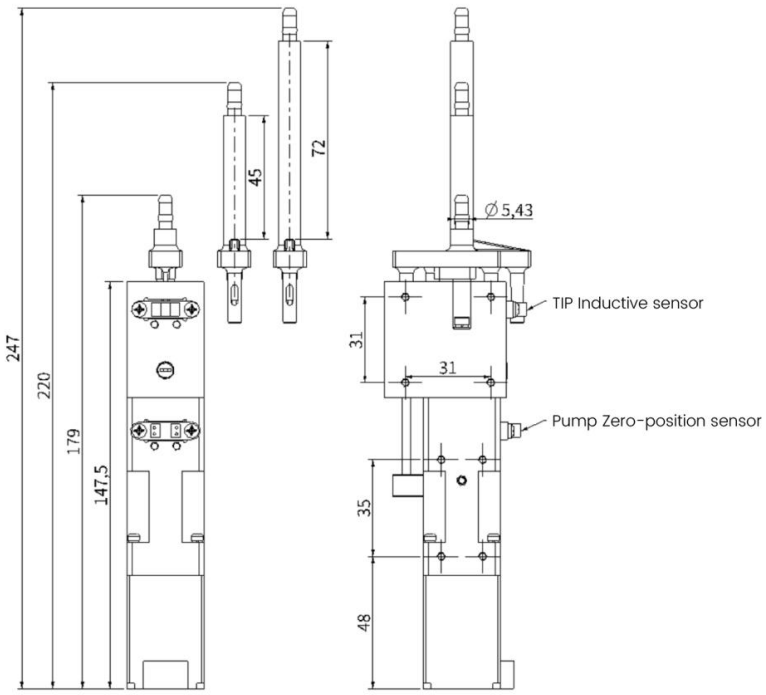


Figure 2 SMTP1 Outline Dimensions

## 2.3 SMTP2

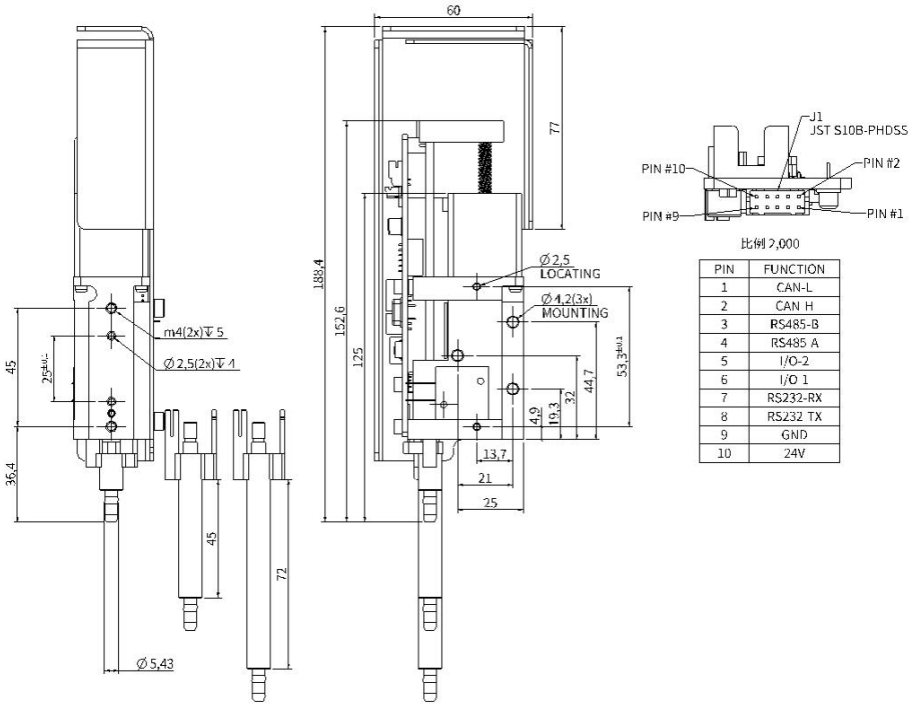


| PIN | FUNCTION |
|---|---|
| 1 | CAN-L |
| 2 | CAN H |
| 3 | RS485-B |
| 4 | RS485 A |
| 5 | I/O-2 |
| 6 | I/O 1 |
| 7 | RS232-RX |
| 8 | RS232 TX |
| 9 | GND |
| 10 | 24V |

Figure 3 SMTP2 Outline Dimensions

## 2.4 SMTP4

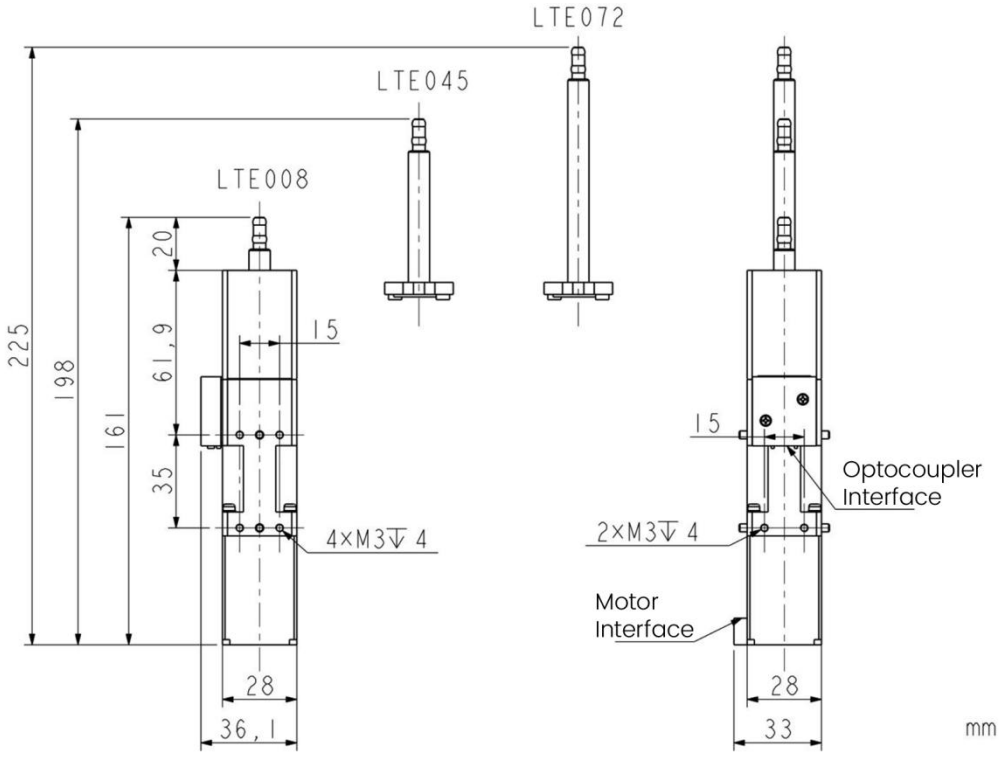


Figure 4 SMTP4 Outline Dimensions

# 3 Motor Information

Table 2 SMTP0/SMTP1/SMTP4(Note1) Motor Information

| SMTP0/SMTP1/SMTP4(Note 1) Motor Information | | | |
|---|---|---|---|
| Project | Value | Unit | Remarks |
| Drive Voltage | 24 | V | DC |
| Rated Current | 0.67 | A | Per Phase |
| Number of Phases | 2 | Phase | / |
| Winding Resistance | 7.2±10% | Ω | / |
| Winding Inductance | 5.1±20% | mH | / |
| Static Angle Error | ±0.09 | / | Max |

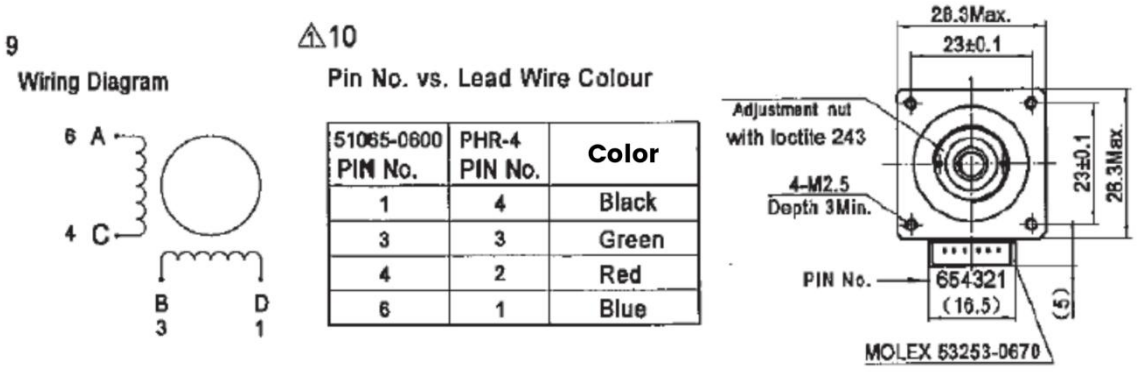


Figure 5 SMTP0/SMTP1/SMTP4 Wiring Diagram

## Note:

*The SMTP2 is an integrated component of the board. All control functions, including those for the motor, are performed internally by the board's system. As this functionality does not require customer intervention, the corresponding control interfaces are not provided for external access.*

# 4 Sensor Information

## 4.1 SMTP0/SMTP1

Table 3 SMTP0/SMTP1 Sensor Electrical Parameters

| SMTP0/SMTP1 Sensor Electrical Parameters | | | |
|---|---|---|---|
| Item | | Symbol | Specification |
| Input Side | Forward Current | $I_F$ | 50mA |
| | Supply Voltage | $V_R$ | 5V |
| Output Side | Collector-Input Voltage | $V_{CEO}$ | 30V |
| | Input-Collector Voltage | $V_{ECO}$ | 5V |
| | Collector Current | $I_C$ | 20mA |

Table 4 SMTP0/SMTP1 Electrical-Optical Characteristics

| SMTP0/SMTP1 Electrical-Optical Characteristics | | | |
|---|---|---|---|
| Item | | Symbol | Specification |
| Input Side | Forward Voltage | $V_F$ | Typ: 1.2V, Max: 1.5V |
| Output Side | Collector-Input Saturation Voltage | $V_{CE(Sat)}$ | Max: 0.5V |

Table 5 SMTP0/SMTP1 Typical Application

| SMTP0/SMTP1 Typical Application | |
|---|---|
| Item | Recommended Value |
| Current-limiting Resistor $R_f$ | 150~200Ω |
| Pull-up Resistor $R_L$ | 10kΩ |
| Note: Rf and RL recommendations for VCC=5VDC. Not included on adapter board; must be connected by customer. For other power voltages, design Rf to ensure 20mA<IF<25mA. | |

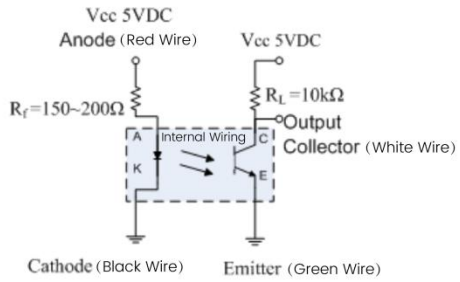


Figure 6 SMTP0/SMTP1 Typical Application

Wiring Instructions:

Red: Connect to power supply positive (+), must connect current-limiting resistor.

Black: Connect to power supply negative (-).

White: Signal output wire. Open-collector output. Pulled high when blocked, low when unblocked.

Green: Connect to logic power supply negative (-).

## 4.2 SMTP4

Table 6 SMTP4 Sensor Electrical Parameters

| SMTP4 Sensor Electrical Parameters | | | |
|---|---|---|---|
| Item | | Symbol | Specification |
| Input Side | Forward Current | $I_F$ | 50mA |
| | Supply Voltage | $V_R$ | 5V |
| Output Side | Collector-Input Voltage | $V_{CEO}$ | 30V |
| | Input-Collector Voltage | $V_{ECO}$ | 5V |
| | Collector Current | $I_C$ | 20mA |

Table 7 SMTP4 Electrical-Optical Characteristics

| SMTP4 Electrical-Optical Characteristics | | | |
|---|---|---|---|
| Item | | Symbol | Specification |
| Input Side | Forward Voltage | $V_F$ | Typ: 1.23V, Max: 1.6V |
| Output Side | Collector-Input Saturation Voltage | VCE(Sat) | Max: 0.4V |

Table 8 SMTP4 Typical Application

| SMTP4 Typical Application | |
|---|---|
| Item | Recommended Value |
| Current-limiting Resistor $R_f$ | 150~200Ω |
| Pull-up Resistor $R_L$ | 10kΩ |
| Note: Rf, RL are recommended values for VCC=5VDC. They are not included on the adapter board and must be connected by the customer. If the customer uses a different supply voltage, Rf must be designed such that 20mA < IF < 25mA. | |

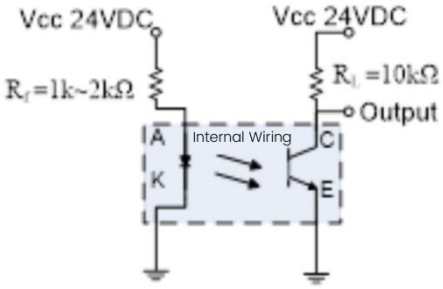


Figure 7 SMTP4 Typical Application

Wiring Instructions:

①A: LED anode, connect to positive power supply; must include current-limiting resistor $R_f$.

②K: LED cathode, connect to negative power supply.

③C: Transistor collector, signal output wire. Open-collector output: outputs high when obstructed, outputs low when unobstructed (requires pull-up resistor).

④E: Transistor emitter, connect to negative logic power supply.

# 5 Optocoupler Information

Table 9 SMTP4 Optocoupler Information

| SMTP4 Optocoupler Information | | |
|---|---|---|
| Item | Value | Remark |
| Connector Model | PHDR-08VS | JST |
| Terminal Model | SPHD-002T-P0.5 | JST |

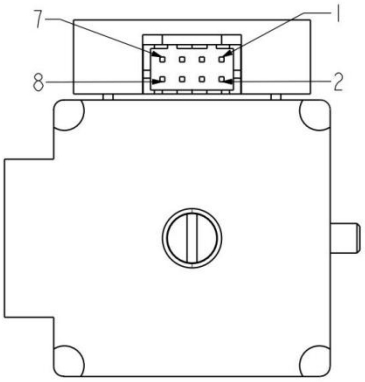


Figure 8 Optocoupler Interface Pin Sequence Diagram

Table 10 SMTP4 Optocoupler Interface

| SMTP4 Optocoupler Interface | | |
|---|---|---|
| | Interface No. | Signal Definition |
| Detection Optocoupler | 1 | E (Detection optocoupler) |
| | 3 | C (Detection optocoupler) |
| | 5 | A (Detection optocoupler) |
| | 7 | K (Detection optocoupler) |
| Position Optocoupler | 2 | E (Position optocoupler) |
| | 4 | C (Position optocoupler) |
| | 6 | A (Position optocoupler) |
| | 8 | K (Position optocoupler) |

# 6 Specification

## 6.1 SMTP0

### 6.1.1 SMTP0 Specifications

Table 11 SMTP0 Specifications

| SMTP0 Specifications | | | | | |
|---|---|---|---|---|---|
| Specification | Parameter | | | | |
| Model | 50μL | 100μL | 250μL | 500μL | 1000μL |
| Drive Design | 4-wire Bipolar Stepping Screw Motor | | | | |
| Motor Speed | 1~3000 pps | | | | |
| Dispensing Resolution | 0.02μL/Step | 0.05μL/Step | 0.125μL/Step | 0.25μL/Step | 0.5μL/Step |
| Full-Stroke Steps | 2000 Steps | | | | |
| Noise | <60 dBA, Indoor Use Only | | | | |
| Operating Temperature/Humidity | 15˚C to 40˚C and 20% to 95% RH at 40˚C, No Condensation | | | | |
| Storage Temperature/Humidity | -20˚C to 65˚C and 30% to 85% RH, No Condensation | | | | |
| Medium Temperature | 15˚C to 40˚C | | | | |
| Power Requirement | 24VDC 500mA | | | | |
| Dimensions (LxWxH) | 6.30 x 1.48 x 1.48 in. | | | | |
| Weight | 300 g | | | | |

### 6.1.2 Pipetting Performance

Table 12 SMTP0 Pipetting Performance

| SMTP0 Pipetting Performance | | | | |
|---|---|---|---|---|
| Tip Size (μL) | Volume(Note1) (μL) | Dispensing Type | Accuracy | Precision |
| 20 | 2 | Single | ≤5% | 6% |
| 20 | 5 | Single | ≤2.5% | 1.5% |
| 20 | 10 | Single | ≤1.5% | 1% |
| 50 | 5 | Single | ≤5% | 2% |
| 50 | 10 | Single | ≤3% | 1% |
| 50 | 50 | Single | ≤2% | 0.75% |
| 200 | 10 | Single | ≤5% | 2% |
| 200 | 50 | Single | ≤2% | 0.75% |
| 200 | 200 | Single | ≤1% | 0.75% |
| 1000 | 10 | Single | ≤7.5% | 3.5% |
| 1000 | 100 | Single | ≤2% | 0.75% |
| 1000 | 1000 | Single | ≤1% | 0.75% |
| 1000 | 100 | Multiple | ≤3% | 2% |

Note:

*1: Volumes determined gravimetrically using high-precision balance under controlled conditions: Test temperature: 25±2 ℃, RH: 50%±5%, Liquid temperature: ambient ≤±0.5℃; Balance: Shimadzu AUV120D.*

*Deionized water with 0.1% NaCl, measured using standard conductive tip. New tip per pump cycle (aspirate/dispense). ≥10 points per volume/pipetting module. Volumes >20μL dispensed via jetting. Volumes ≤20μL dispensed with tip submerged. Results may vary with other liquids/environments.*

## 6.2 SMTP1

### 6.2.1 SMTP1 Specifications

Table 13 SMTP1 Specifications

| SMTP1 Specifications | | | | | |
|---|---|---|---|---|---|
| Specification | Parameter | | | | |
| Model | 50μL | 100μL | 250μL | 500μL | 1000μL |
| Drive Design | 4-wire Bipolar Stepping Screw Motor | | | | |
| Motor Speed | 1~3000 pps | | | | |
| Dispensing Resolution | 0.02μL/Step | 0.05μL/Step | 0.125μL/Step | 0.25μL/Step | 0.5μL/Step |
| Full-Stroke Steps | 1000 Steps (Max 1200 steps) | | | | |
| Pressure LLD Connection | 1/4-28 UNF | | | | |
| Communication (Motor Drive) | RS232, RS485 (only with optional ISC1000 motor drive) | | | | |
| Noise | <60 dBA, Indoor Use Only | | | | |
| Operating Temperature/Humidity | 15˚C to 40˚C and 20% to 95% RH at 40˚C, No Condensation | | | | |
| Storage Temperature/Humidity | -20˚C to 65˚C and 30% to 85% RH, No Condensation | | | | |
| Medium Temperature | 15˚C to 40˚C | | | | |
| Power Requirement | 24VDC 500mA | | | | |
| Dimensions (LxWxH) | 7.05x 2.03x 1.11 in. [179x51.4 x28 mm] | | | | |
| Weight | 400 g | | | | |

### 6.2.2 Pipetting Performance

Table 14 SMTP1 Pipetting Performance

| SMTP1 Pipetting Performance | | | | |
|---|---|---|---|---|
| Tip Size (μL) | Volume (μL) | Dispensing Type | Accuracy | Precision |
| 20 | 2 | Single | ≤5% | 6% |
| 20 | 5 | Single | ≤2.5% | 1.5% |
| 20 | 10 | Single | ≤1.5% | 1% |
| 50 | 5 | Single | ≤5% | 2% |
| 50 | 10 | Single | ≤3% | 1% |
| 50 | 50 | Single | ≤2% | 0.75% |
| 200 | 10 | Single | ≤5% | 2% |
| 200 | 50 | Single | ≤2% | 0.75% |
| 200 | 200 | Single | ≤1% | 0.75% |
| 1000 | 10 | Single | ≤7.5% | 3.5% |
| 1000 | 100 | Single | ≤2% | 0.75% |
| 1000 | 1000 | Single | ≤1% | 0.75% |
| 1000 | 100 | Multiple | ≤3% | 2% |

## 6.3 SMTP2

### 6.3.1 SMTP2 Specifications

Table 15 SMTP2 Specifications

| SMTP2 Specifications | |
|---|---|
| **Specification** | **Parameter** |
| model | 1000μL |
| Drive Design | 4-wire Bipolar Stepping Screw Motor |
| Motor Speed | 1~3000 pps |
| Liquid Level Detector (LLD) | Pressure (pLLD), Capacitance (cLLD), Hybrid (hLLD) |
| Dispensing Resolution | Standard Mode: 0.319 μ L/Step, 3143 Steps Full Stroke |
| | High-resolution Mode: 0.02 μ L/Microstep, 48000 Microsteps Full Stroke |
| Communication Interface | RS232, RS485, CAN |
| Noise | <60 dBA, Indoor Use Only |
| Operating Temperature/Humidity | 15˚C to 40˚C and 20% to 95% RH at 40˚C, No Condensation |
| Storage Temperature/Humidity | -20˚C to 65˚C and 30% to 85% RH, No Condensation |
| Medium Temperature | 15˚C to 40˚C |
| Power Requirement | 24VDC 500mA |
| Power Consumption | 500 mA (Peak) |
| Cascading | Max. 16 Pumps Cascaded |
| Dimensions (HxWxD)<br>(With Cover, Without Tip) | 7.45 x 2.37 x 1.28 in. [189 x 60 x 32.5 mm] |
| Weight | 300g |

### 6.3.2 Pipetting Performance

Table 16 SMTP2 Pipetting Performance

| SMTP2 Pipetting Performance | | | | |
|---|---|---|---|---|
| **Tip Size (μL)** | **Volume (μL)** | **Dispensing Type** | **Accuracy** | **Precision** |
| 20 | 2 | Single | ≤5% | 6% |
| 20 | 5 | Single | ≤2.5% | 1.5% |
| 20 | 10 | Single | ≤1.5% | 1% |
| 50 | 5 | Single | ≤5% | 2% |
| 50 | 10 | Single | ≤3% | 1% |
| 50 | 50 | Single | ≤2% | 0.75% |
| 200 | 10 | Single | ≤5% | 2% |
| 200 | 50 | Single | ≤2% | 0.75% |
| 200 | 200 | Single | ≤1% | 0.75% |
| 1000 | 10 | Single | ≤7.5% | 3.5% |
| 1000 | 100 | Single | ≤2% | 0.75% |
| 1000 | 1000 | Single | ≤1% | 0.75% |
| 1000 | 100 | Multiple | ≤3% | 2% |

## 6.4 SMTP4

### 6.4.1 SMTP4 Specifications

Table 17 SMTP4 Specifications

| SMTP4 Specifications | | | | |
|---|---|---|---|---|
| Specification | Parameter | | | |
| Model | 100μL | 250μL | 500μL | 1000μL |
| Drive Design | 4-wire Bipolar Stepping Screw Motor | | | |
| Motor Speed | 1~3000 pps | | | |
| Dispensing Resolution | 0.05μL/step | 0.125μL/step | 0.25μL/step | 0.5μL/step |
| Compatible Tips | Standard: TECAN tips; Customizable per client requirements. | | | |
| Tip Mounting Force | 30N | | | |
| Full Stroke Steps | 2000 Steps | | | |
| Tip Ejection Steps | 550 Steps | | | |
| Tip Ejection Force | Tip ejection motor thrust >120N at speed 5r/s. | | | |
| Noise | <60 dBA, Indoor Use Only | | | |
| Operating Temperature/Humidity | 15˚C to 40˚C and 20% to 95% RH at 40˚C, No Condensation | | | |
| Storage Temperature/Humidity | -20˚C to 65˚C and 30% to 85% RH, No Condensation | | | |
| Medium Temperature | 15˚C to 40˚C | | | |
| Power Requirement | 24VDC | | | |
| Overall Dimensions | 28 x 28 x 161 mm | | | |
| Weight | 300g | | | |

### 6.4.2 Pipetting Performance

Table 18 SMTP4 Pipetting Performance

| SMTP4 Pipetting Performance | | | |
|---|---|---|---|
| Tip Size (μL) | Volume (μL) | Accuracy(ACC) | Precision(CV) |
| 20 | 2 | ≤5% | 6% |
| 20 | 5 | ≤2.5% | 1.5% |
| 20 | 10 | ≤1.5% | 1% |
| 50 | 5 | ≤5% | 2% |
| 50 | 10 | ≤3% | 1% |
| 50 | 50 | ≤2% | 0.75% |
| 200 | 10 | ≤5% | 2% |
| 200 | 50 | ≤2% | 0.75% |
| 200 | 200 | ≤1% | 0.75% |
| 1000 | 10 | ≤7.5% | 3.5% |
| 1000 | 100 | ≤2% | 0.75% |
| 1000 | 1000 | ≤1% | 0.75% |

# 7 Selection Guide

Table 19 Selection List

| SMTP Series Selection List | | | |
|---|---|---|---|
| Type | Range | Tip Adapter | Adapter Diameter |
| SMTP0 | 1=0050μL | 0=LTE019 (19mm) | 0=(Default) |
| | 2=0100μL | 1=LTE060 (60mm) | |
| | 3=0250μL | 2=LTE087 (87mm) | |
| | 4=0500μL | 3=LTEM6 (Adapter) | |
| | 5=1000μL | | |
| SMTP1 | 1=0050μL | 0=LTE008 (08mm) | 0=(Default) |
| | 2=0100μL | 1=LTE045 (45mm) | |
| | 3=0250μL | 2=LTE072 (72mm) | |
| | 4=0500μL | | |
| | 5=1000μL | | |
| SMTP2 | 5=1000μL | 0=LTE008 (08mm) | 0=(Default) |
| | | 1=LTE045 (45mm) | |
| | | 2=LTE072 (72mm) | |
| SMTP4 | 2=0100μL | 0=LTE008 (08mm) | 0=(Default) |
| | 3=0250μL | 1=LTE045 (45mm) | |
| | 4=0500μL | 2=LTE072 (72mm) | |
| | 5=1000μL | | |

### Selection Example:

SMTP0-510: SMTP0 series, 1000μL volume, tip adapter extension 60mm.

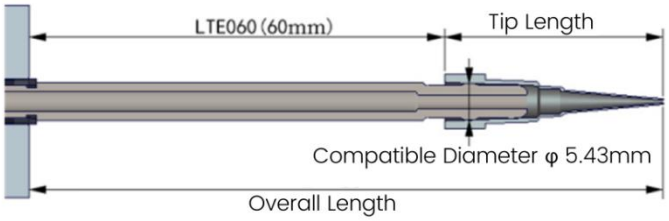


Figure 9 Adapter Diagram

SMTP0-530: SMTP0 series, 1000μL volume, tip adapter with M6 threaded interface.

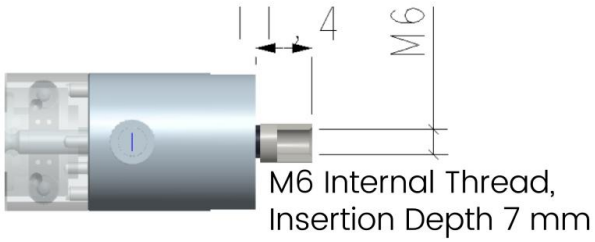


Figure 10 M6 Internal Thread Adapter

### Note:

*Total length must exceed reagent tube depth.*
*For optional tip adapters/tips, refer to SMTP Series Ordering Information.*

# 8 Ordering Information

Table 20 Order List

| Product Model Information List | | | |
|---|---|---|---|
| No. | Product Code | Model | Description |
| 1 | 909001 | SMTP0-100 | Pipetting SMTPO-100 909001 |
| 2 | 909012 | SMTP0-110 | Pipetting SMTPO-110 909012 |
| 3 | 909024 | SMTP0-120 | Pipetting SMTPO-120 909024 |
| 4 | 909025 | SMTP0-130 | Pipetting SMTPO-130 909025 |
| 5 | 909002 | SMTP0-200 | Pipetting SMTPO-200 909002 |
| 6 | 909013 | SMTP0-210 | Pipetting SMTPO-210 909013 |
| 7 | 909026 | SMTP0-220 | Pipetting SMTPO-220 909026 |
| 8 | 909027 | SMTP0-230 | Pipetting SMTPO-230 909027 |
| 9 | 909003 | SMTP0-300 | Pipetting SMTPO-300 909003 |
| 10 | 909014 | SMTP0-310 | Pipetting SMTPO-310 909014 |
| 11 | 909022 | SMTP0-320 | Pipetting SMTPO-320 909022 |
| 12 | 909021 | SMTP0-330 | Pipetting SMTPO-330 909021 |
| 13 | 909004 | SMTP0-400 | Pipetting SMTPO-400 909004 |
| 14 | 909015 | SMTP0-410 | Pipetting SMTPO-410 909015 |
| 15 | 909028 | SMTP0-420 | Pipetting SMTPO-420 909028 |
| 16 | 909029 | SMTP0-430 | Pipetting SMTPO-430 909029 |
| 17 | 909005 | SMTP0-500 | Pipetting SMTPO-500 909005 |
| 18 | 909016 | SMTP0-510 | Pipetting SMTPO-510 909016 |
| 19 | 909030 | SMTP0-520 | Pipetting SMTPO-520 909030 |
| 20 | 909031 | SMTP0-530 | Pipetting SMTPO-530 909031 |
| 21 | 909006 | SMTP1-100 | Pipetting SMTP1-100 909006 |
| 22 | 909032 | SMTP1-110 | Pipetting SMTP1-110 909032 |
| 23 | 909033 | SMTP1-120 | Pipetting SMTP1-120 909033 |
| 24 | 909007 | SMTP1-200 | Pipetting SMTP1-200 909007 |
| 25 | 909034 | SMTP1-210 | Pipetting SMTP1-210 909034 |
| 26 | 909035 | SMTP1-220 | Pipetting SMTP1-220 909035 |
| 27 | 909008 | SMTP1-300 | Pipetting SMTP1-300 909008 |
| 28 | 909023 | SMTP1-310 | Pipetting SMTP1-310 909023 |
| 29 | 909019 | SMTP1-320 | Pipetting SMTP1-320 909019 |
| 30 | 909009 | SMTP1-400 | Pipetting SMTP1-400 909009 |
| 31 | 909036 | SMTP1-410 | Pipetting SMTP1-410 909036 |
| 32 | 909037 | SMTP1-420 | Pipetting SMTP1-420 909037 |
| 33 | 909010 | SMTP1-500 | Pipetting Pump SMTP1-500 909010 |
| 34 | 909017 | SMTP1-510 | Pipetting Pump SMTP1-510 909017 |
| 35 | 909038 | SMTP1-520 | Pipetting Pump SMTP1-520 909038 |
| 36 | 909011 | SMTP2-500 | Pipetting Pump SMTP2-500 909011 |
| 37 | 909018 | SMTP2-510 | Pipetting Pump SMTP2-510 909018 |
| 38 | 909020 | SMTP2-520 | Pipetting Pump SMTP2-520 909020 |
| 39 | 729003 | SMTP2-CK | SMTP2 Protective Cover-side-mounted |
| 40 | 729005 | SMTP2-W | Power and Signal Cable Set, Lead Wire 200mm |
| 41 | 729006 | SMTP2-BK | SMTP2 Protective Cover-rear-mounted |
| 42 | 909064 | SMTP4 100μL | Pipetting Pump SMTP4 100μL 909064 |
| 43 | 909069 | SMTP4 500μL | Pipetting Pump SMTP4 500μL 909069 |

| | | | |
|---|---|---|---|
| 44 | 909070 | SMTP4-210 | Pipetting Pump SMTP4-210 909070 |
| 45 | 909078 | SMTP4-220 | Pipetting Pump SMTP4-220 909078 |
| 46 | 909075 | SMTP4-410 | Pipetting Pump SMTP4-410 909075 |
| 47 | 909080 | SMTP4-420 | Pipetting Pump SMTP4-420 909080 |
| 48 | 909089 | SMTP4-520 | Pipetting Pump SMTP4-520 909089 |

# 9 Appendices

## 9.1 Appendix : Tables and Figures

Table 1 SMTP Series Comparison ..... 5
Table 2 SMTP0/SMTP1/SMTP4(Note1) Motor Information ..... 8
Table 3 SMTP0/SMTP1 Sensor Electrical Parameters ..... 9
Table 4 SMTP0/SMTP1 Electrical-Optical Characteristics ..... 9
Table 5 SMTP0/SMTP1 Typical Application ..... 9
Table 6 SMTP4 Sensor Electrical Parameters ..... 10
Table 7 SMTP4 Electrical-Optical Characteristics ..... 10
Table 8 SMTP4 Typical Application ..... 10
Table 9 SMTP4 Optocoupler Information ..... 11
Table 10 SMTP4 Optocoupler Interface ..... 11
Table 11 SMTP0 Specifications ..... 12
Table 12 SMTP0 Pipetting Performance ..... 12
Table 13 SMTP1 Specifications ..... 13
Table 14 SMTP1 Pipetting Performance ..... 13
Table 15 SMTP2 Specifications ..... 14
Table 16 SMTP2 Pipetting Performance ..... 14
Table 17 SMTP4 Specifications ..... 15
Table 18 SMTP4 Pipetting Performance ..... 15
Table 19 Selection List ..... 16
Table 20 Order List ..... 17

Figure 1 SMTP0 Outline Dimensions ..... 6
Figure 2 SMTP1 Outline Dimensions ..... 6
Figure 3 SMTP2 Outline Dimensions ..... 7
Figure 4 SMTP4 Outline Dimensions ..... 7
Figure 5 SMTP0/SMTP1/SMTP4 Wiring Diagram ..... 8
Figure 6 SMTP0/SMTP1 Typical Application ..... 9
Figure 7 SMTP4 Typical Application ..... 10
Figure 8 Optocoupler Interface Pin Sequence Diagram ..... 11
Figure 9 Adapter Diagram ..... 16

Figure 10 M6 Internal Thread Adapter ..... 16

FOREACH

Web: www.foreachtek.com
E-mail: info@foreachtek.com

SHENZHEN FOREACH TECHNOLOGY Co., Ltd.
13th Floor, 2nd Building, Yufengda Industrial Park, 1008th Guang Qiao Boulevard, Guangming District, Shenzhen 518132 CHINA