PDM5 Pressure Detection Module
Specification Sheet

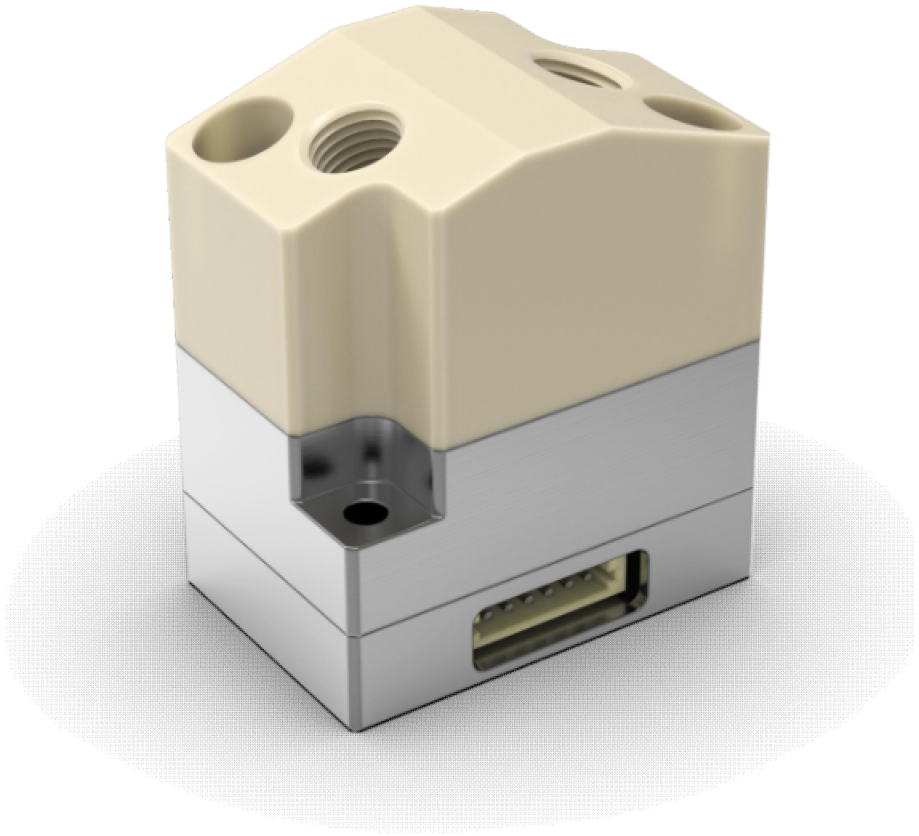

Table Of Contents

1 Outline Dimensions 3

2 Electrical Connections 4

2.1 Pin Assignment 4

Terminal Pin Function Definition 4

2.2 Cable Specification (Optional) 4

Cable Housing and Terminal Brand & Part Number 5

3 Specifications 5

Fluid Specifications 5

Installation Dimensions 5

Power Specifications 5

Communication Specifications 5

Signal Specifications 5

Environmental Specifications 6

Durability 6

Certifications 6

4 Ordering Information 7

Ordering Information 7

Cable Specification (Optional) 7

5 Appendices 8

5.1 Appendix (A): Tables and Figures 8

1 Outline Dimensions

Unit:mm

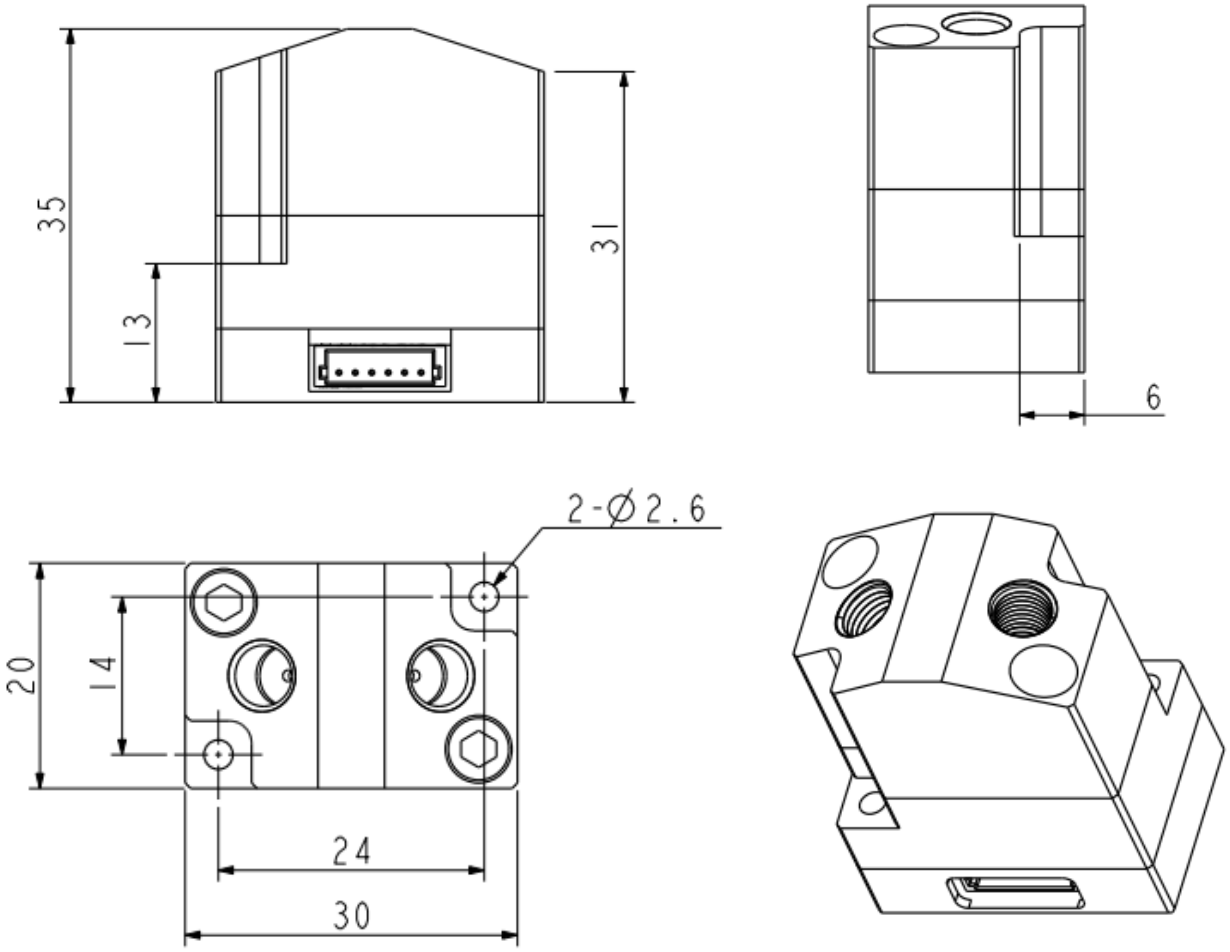

Figure 1 Outline Drawing

2 Electrical Connections

2.1 *Pin Assignment*

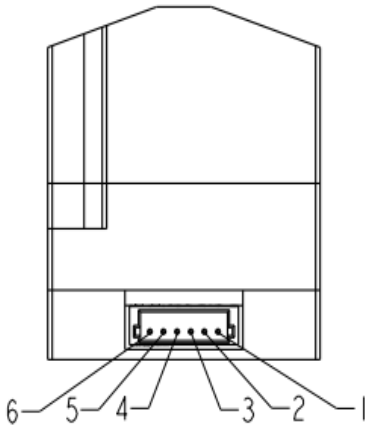

Figure 2 Terminal Pin Configuration

Table 1 Terminal Pin Function Definition

Terminal Pin Function Definition		
Pin No.	Pin Definition	Function Description
1	VCC	Positive power supply input
2	GND	Ground
3	GND	Ground
4	SCLK	I2C serial clock input
5	SDA	I2C bidirectional serial data line
6	NC	No internal connection

2.2 *Cable Specification (Optional)*

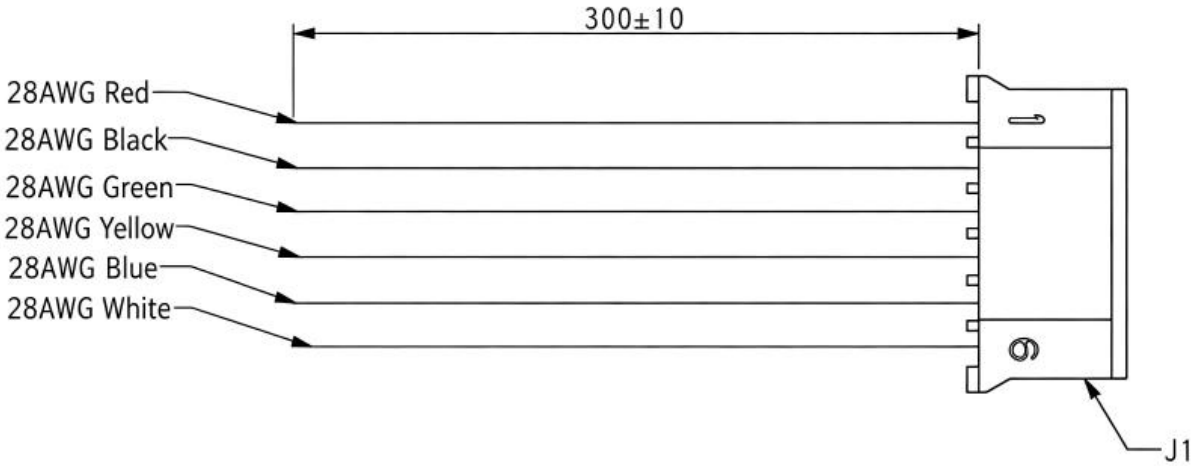

Figure 3 Wire Sequence Definition

Table 2 Cable Housing and Terminal Brand & Part Number

Cable Housing and Terminal Brand & Part Number		
No.	Item	Part Number
1	Plug Housing	JST ZHR-6
2	Plug Terminal	JST SZH-002T-P0.5

3 Specifications

Table 3 Specifications

Fluid Specifications		
Wetted Housing Material	PEEK	
Fluid Port	1/4-28 UNF-2B Female Thread, 7.5 mm	
Internal Volume	⩽ 55 μL	
Wetted Seal Material	FKM	
Wetted Core Material	316L Stainless Steel	
Recommended Fluid Fitting Torque	0.32 ~ 0.4 N・m	
Bore Diameter	1 mm	
Rated Working Pressure	⩽ 2000 kPa	Note 1
Burst Pressure	⩽ 2700 kPa	Note 2
Installation Dimensions		
Overall Dimensions	30 × 20 × 35 mm (L × W × H)	
Mounting Hole Inner Diameter	Φ2.6 mm	
Mounting Hole Depth	13 mm	
Recommended Mounting Screw	Socket Head Cap Screw, M2.5	
Weight	⩽ 35 g	
Power Specifications		
Minimum Operating Voltage	4.7V	
Mounting Hole Inner Diameter	5.3V	
Recommended Operating Voltage	5V	
Operating Current	30mA(Peak)	
Communication Specifications		
Interface Type	I2C	
Pull-up Resistor	No built-in pull-up resistor by default; contact sales for custom configuration if required.	
Communication Speed	100kbps	
Output Signal	Digital	
Bus Role	Slave	
IIC Address Type	7-bit	
Default IIC Address	0x6D (Hexadecimal)	
	109 (Decimal)	
Recommended Mating Plug	ZHR-6, JST	
Signal Specifications		
Power-on Response Time	< 50 ms	
Absolute Accuracy (TEB)	Better than 1% FS	Note 3

Absolute Total Error	＜ 2 kPa	＜ 4 kPa	＜ 7 kPa	＜ 10 kPa	Note 4
Measuring Range	10 - 200 kPa	10 - 400 kPa	10 - 700 kPa	10 - 1200 kPa	Note 5
Effective Sampling Rate	100 Hz				
Pressure Resolution	5 Pa				
Stability	⩽ ±0.15% FS/Year				
Environmental Specifications					
Operating Temperature	0 ~ 70 ℃				
Operating Humidity	10 ~ 70 %RH, non-condensing, non-freezing				
Storage Temperature	-20 ~ 100 ℃				
Storage Humidity	10 ~ 70 %RH, non-condensing, non-freezing				
Durability					
Pressure Cycling Life	＞ 1.5 million pressure cycles @ 2 - 5 Hz, pressure profile: 10 kPa ~ FS ~ 10 kPa, at room temperature				
Certifications					
EMC	CE & RE: EN55011 Class B GB 4824 ESD GB/T 17626.2, Level 4				
RoHS	Sensor: 2011/65/EU and 2015/863/EU Packaging: 2004/12/EC				

Note:

1. Rated Working Pressure: The maximum pressure that can be applied without altering the performance or accuracy of the sensor.

2. Burst Pressure: The maximum pressure that can be applied without causing rupture of the sensing element or the sensor body.

3. Absolute Accuracy: In this document, it is defined as equivalent to Total Error Band (TEB), which covers all possible error sources in pressure measurement, including non-linearity, pressure hysteresis, noise, thermal effects, etc., expressed as a percentage of full scale (%FS).

4. Absolute Total Error: It shares the same definition as absolute accuracy, expressed in the pressure unit kPa.

5. Measuring Range: The PDM5 currently supports 4 selectable measuring ranges, all of absolute pressure type.

4 Ordering Information

Table 4 Ordering Information

Ordering Information		
No.	Product Code	Function Description
1	449038	PDM5-40N-0200
2	449040	PDM5-40N-0400
3	449041	PDM5-40N-0700
4	449042	PDM5-40N-1200

PDM5	-	**40N**	-	**0200**
Product Series		Protocol		Measuring Range: Absolute Pressure
		I2C		0200:0-200KPa
				0400:0-400KPa
				0700:0-700Kpa
				1200:0-1200Kpa

Table 5 CableOrdering Information

Cable Specification (Optional)			
Pin No.	Product Code	Plug Type	Description
1	399001	ZHR-6	28AWG PVC ZHR-6 300mm

5 Appendices

5.1 *Appendix (A): Tables and Figures*

Table 1 Terminal Pin Function Definition 4

Table 2 Cable Housing and Terminal Brand & Part Number 5

Table 3 Specifications 5

Table 4 Ordering Information 7

Table 5 CableOrdering Information 7

Figure 1 Outline Drawing 3

Figure 2 Terminal Pin Configuration 4

Figure 3 Wire Sequence Definition 4

FOREACH
Web: www.foreachtek.com
E-mail: info@foreachtek.com

SHENZHEN FOREACH TECHNOLOGY Co., Ltd.
13th Floor, 2nd Building, Yufengda Industrial Park, 1008th Guang Qiao Boulevard, Guangming District,
Shenzhen 518132 CHINA